Proposed Transmission line for

DCA 5.5 "

Vmps

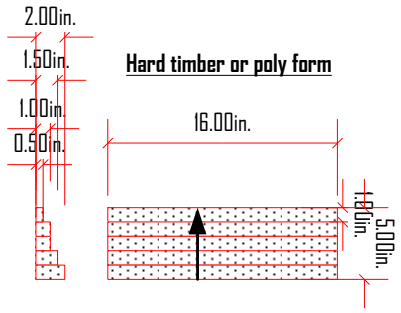

Right

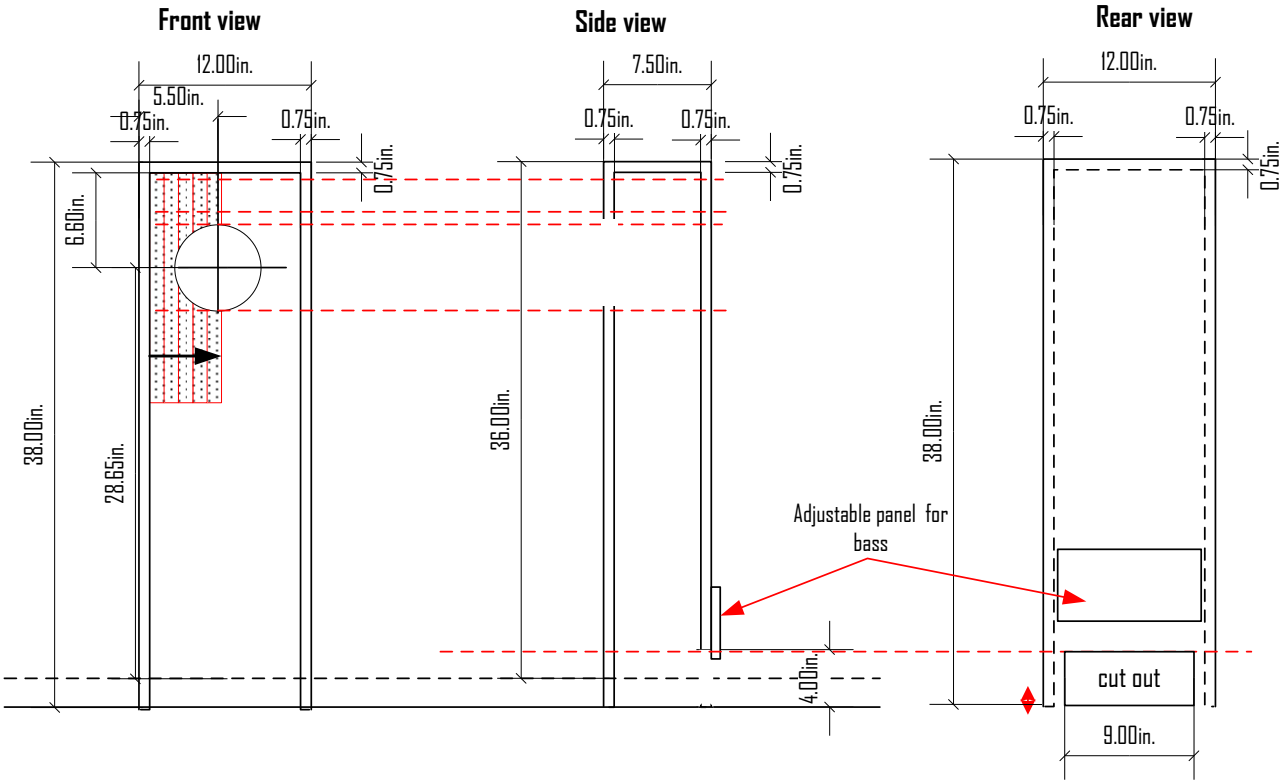
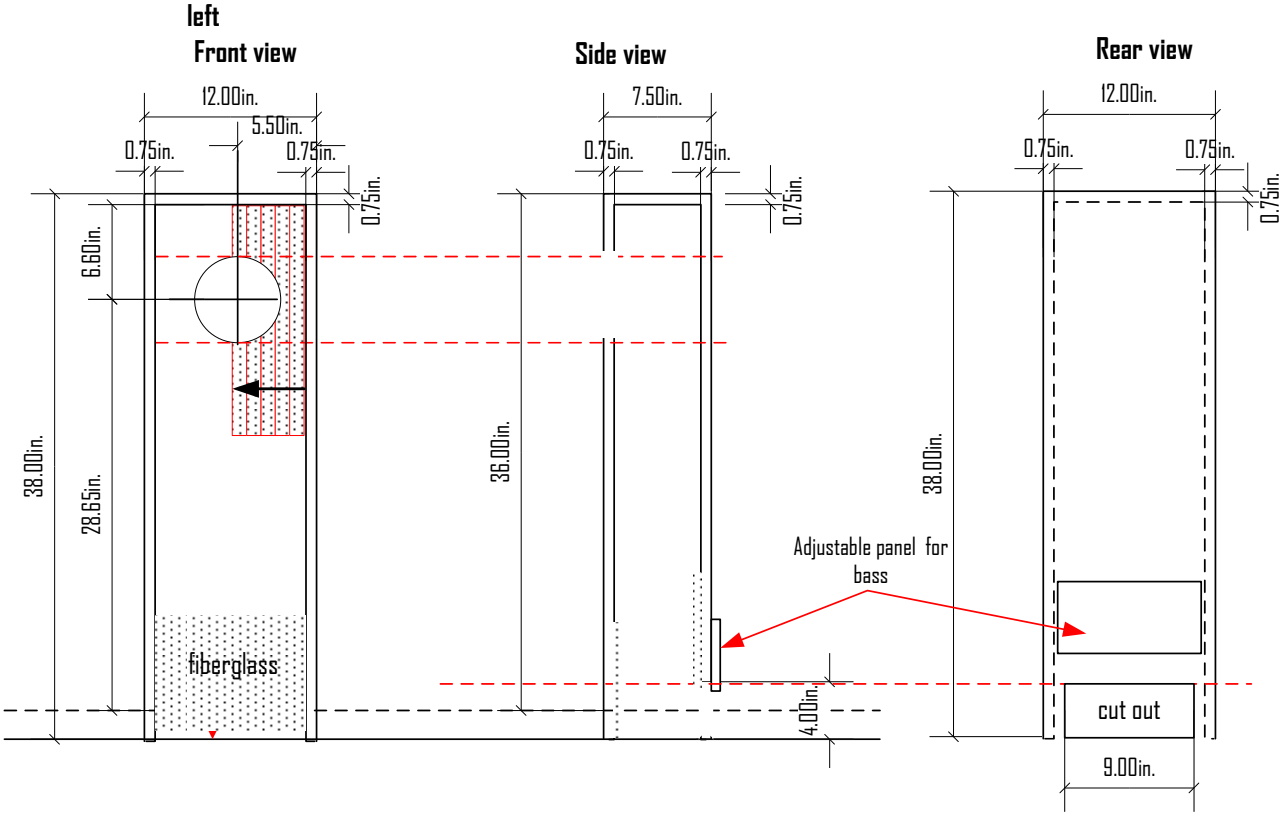
left